SUMMERSET

32" Sizzler Cart

Model	CART-SIZ32
Overall Dimensions*	W56" X H36" X D22"
Shelf Dimensions	W11" X H22"
Cart Wheel Height	3 3/4"

#304 Stainless Steel Construction

*** Manufacturer Approximate Overall Dimensions**
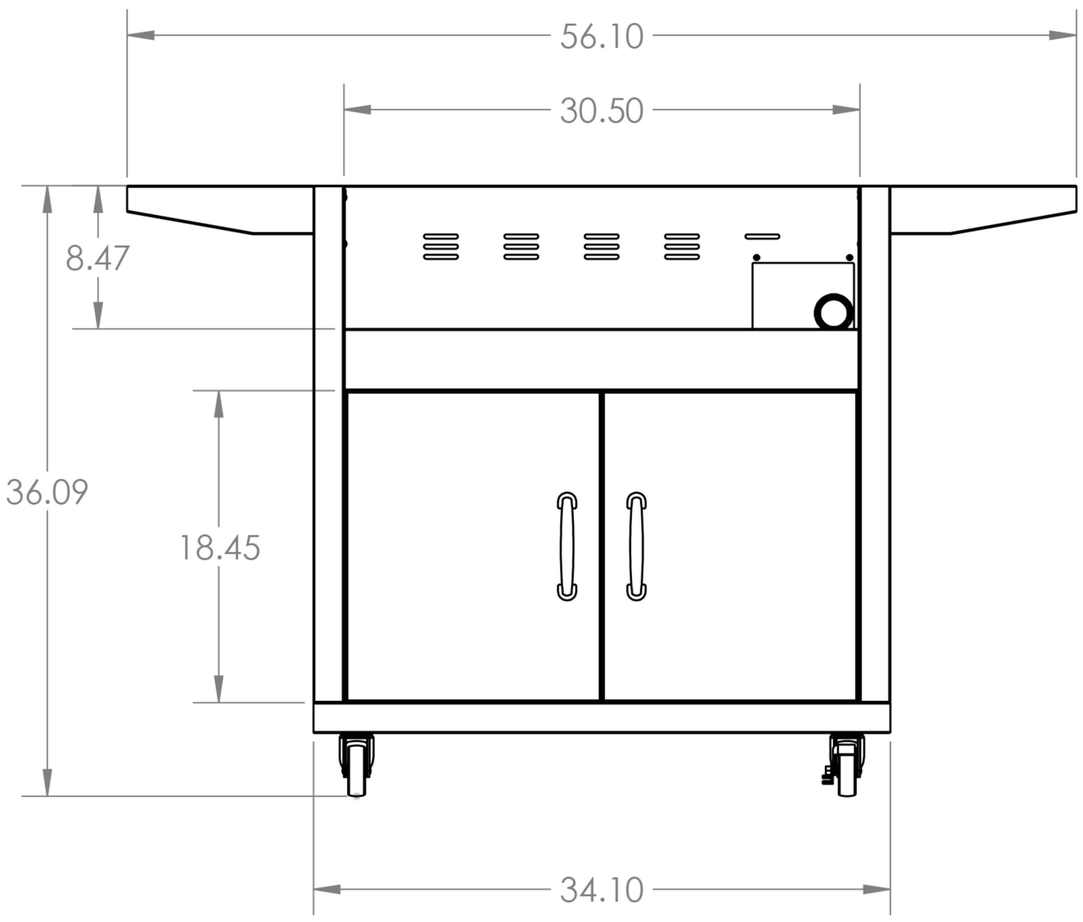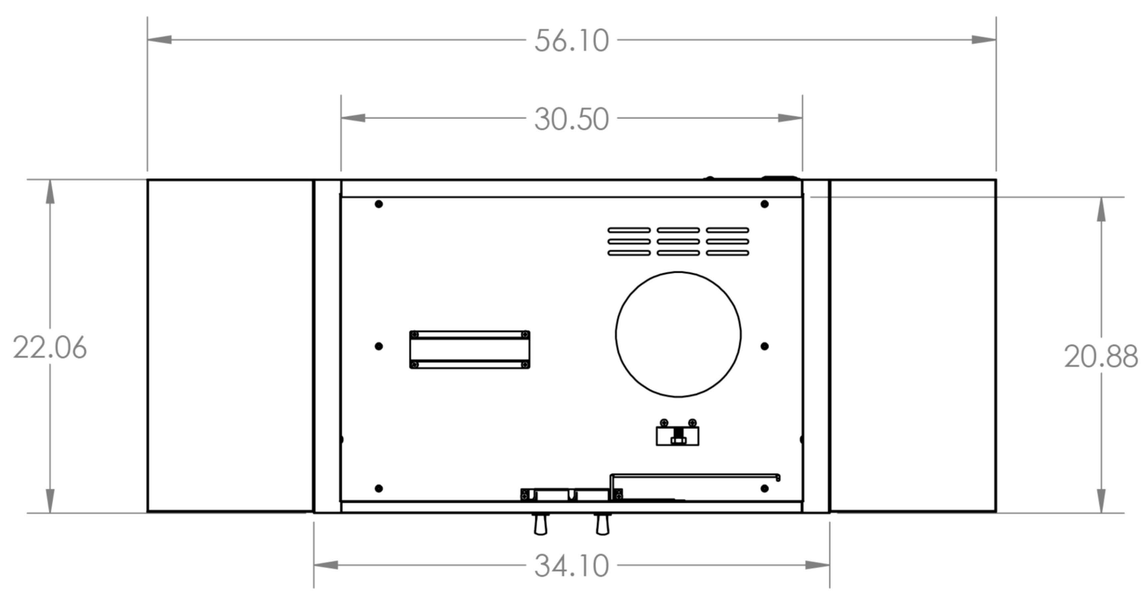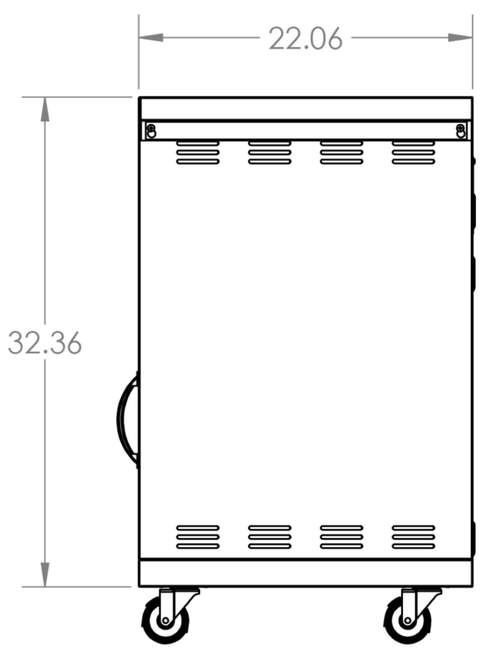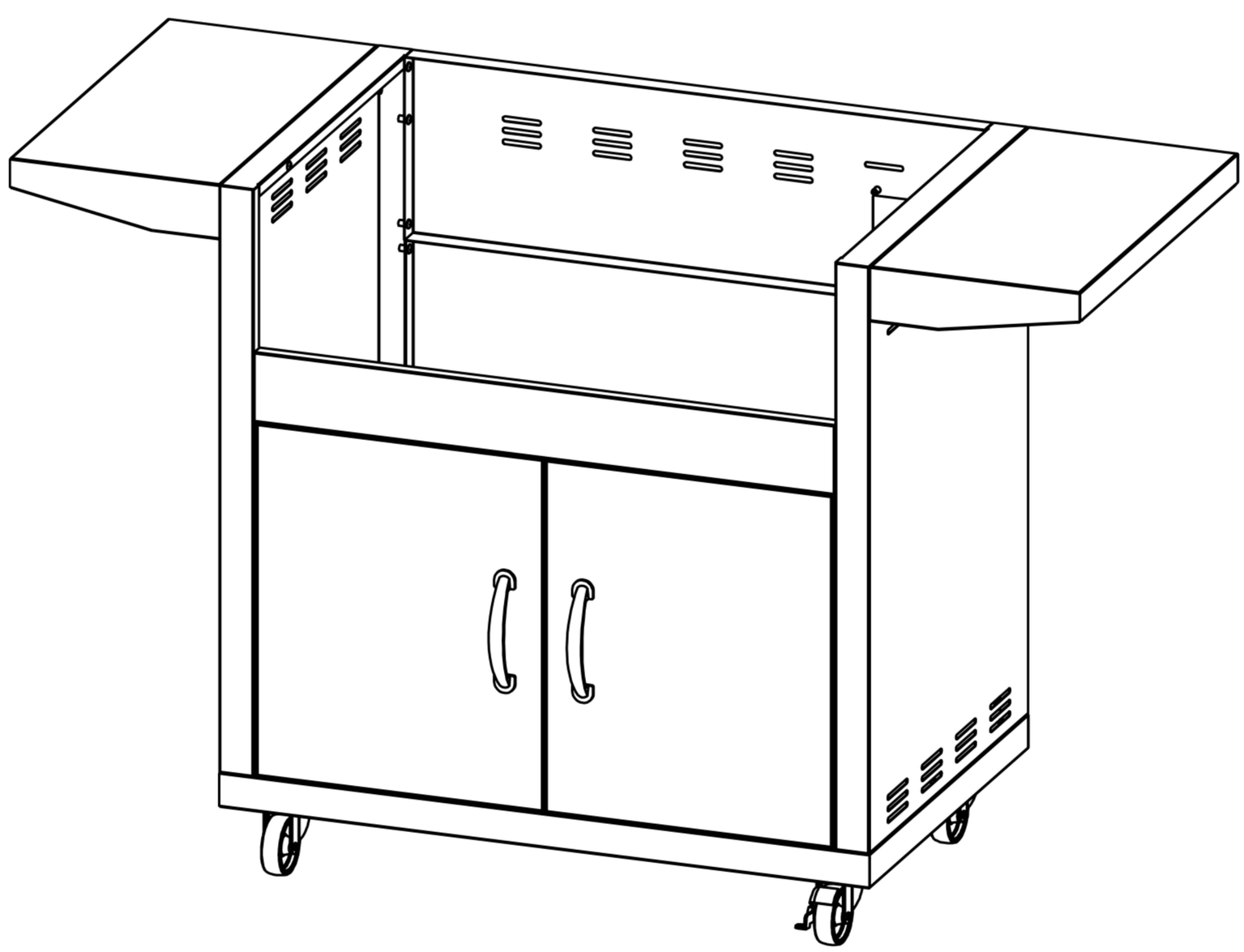
Notes